SECTION CO
ENGINE COOLING SYSTEM

CONTENTS

HR16DE

PRECAUTION 2

PRECAUTIONS 2
Precaution for Supplemental Restraint System (SRS) "AIR BAG" and "SEAT BELT PRE-TENSIONER" 2

PREPARATION 3

PREPARATION 3
Special Service Tool 3
Commercial Service Tool 3

SYSTEM DESCRIPTION 4

DESCRIPTION 4
Engine Cooling System 4
Engine Cooling System Schematic 5

SYMPTOM DIAGNOSIS 6

OVERHEATING CAUSE ANALYSIS 6
Troubleshooting Chart 6

PERIODIC MAINTENANCE 8

ENGINE COOLANT 8
Inspection 8
Draining Engine Coolant 8
Refilling 9
Flushing Cooling System 11

RADIATOR 12

RADIATOR CAP 12
RADIATOR CAP : Inspection 12

RADIATOR 12
RADIATOR : Inspection 12

REMOVAL AND INSTALLATION 14

RADIATOR 14
Exploded View 14
Removal and Installation 14

COOLING FAN 17
Exploded View 17
Removal and Installation 17
Disassembly and Assembly 18

WATER PUMP 19
Exploded View 19
Removal and Installation 19

THERMOSTAT 21
Exploded View 21
Removal and Installation 21

WATER OUTLET 24
Exploded View 24
Removal and Installation 25

SERVICE DATA AND SPECIFICATIONS (SDS) 26

SERVICE DATA AND SPECIFICATIONS (SDS) 26
Standard and Limit 26

PRECAUTION

PRECAUTIONS

Precaution for Supplemental Restraint System (SRS) "AIR BAG" and "SEAT BELT PRE-TENSIONER"

INFOID:0000000009509706

The Supplemental Restraint System such as “AIR BAG” and “SEAT BELT PRE-TENSIONER”, used along with a front seat belt, helps to reduce the risk or severity of injury to the driver and front passenger for certain types of collision. Information necessary to service the system safely is included in the SR and SB section of this Service Manual.

WARNING:

- **To avoid rendering the SRS inoperative, which could increase the risk of personal injury or death in the event of a collision which would result in air bag inflation, all maintenance must be performed by an authorized NISSAN/INFINITI dealer.**
- **Improper maintenance, including incorrect removal and installation of the SRS, can lead to personal injury caused by unintentional activation of the system. For removal of Spiral Cable and Air Bag Module, see the SR section.**
- **Do not use electrical test equipment on any circuit related to the SRS unless instructed to in this Service Manual. SRS wiring harnesses can be identified by yellow and/or orange harnesses or harness connectors.**

PRECAUTIONS WHEN USING POWER TOOLS (AIR OR ELECTRIC) AND HAMMERS

WARNING:

- **When working near the Airbag Diagnosis Sensor Unit or other Airbag System sensors with the Ignition ON or engine running, DO NOT use air or electric power tools or strike near the sensor(s) with a hammer. Heavy vibration could activate the sensor(s) and deploy the air bag(s), possibly causing serious injury.**
- **When using air or electric power tools or hammers, always switch the Ignition OFF, disconnect the battery and wait at least three minutes before performing any service.**

PREPARATION

PREPARATION

Special Service Tool

INFOID:0000000009444786

The actual shapes of Kent-Moore tools may from those of special service tools illustrated here.

Tool number (Kent-Moore No.) Tool name	Description
KV991J0070 (J-45695) Coolant refill tool 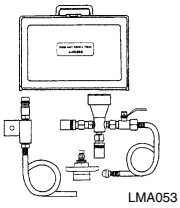 LMA053	Refilling engine cooling system
EG17650301 (J-33984-A) Radiator cap tester adapter 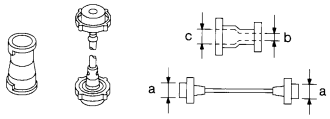 S-NT564	Adapting radiator cap tester to radiator cap and radiator filler neck **a: 28 (1.10) dia.** **b: 31.4 (1.236) dia.** **c: 41.3 (1.626) dia.** Unit: mm (in)

Commercial Service Tool

INFOID:0000000009444787

Tool name	Description
Power tool 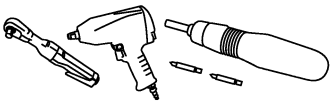 PIIB1407E	Loosening nuts, screws and bolts
Radiator cap tester 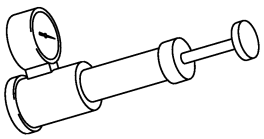 PBIC1982E	Checking radiator and radiator cap

SYSTEM DESCRIPTION

DESCRIPTION

Engine Cooling System

INFOID:0000000009444788

M/T models

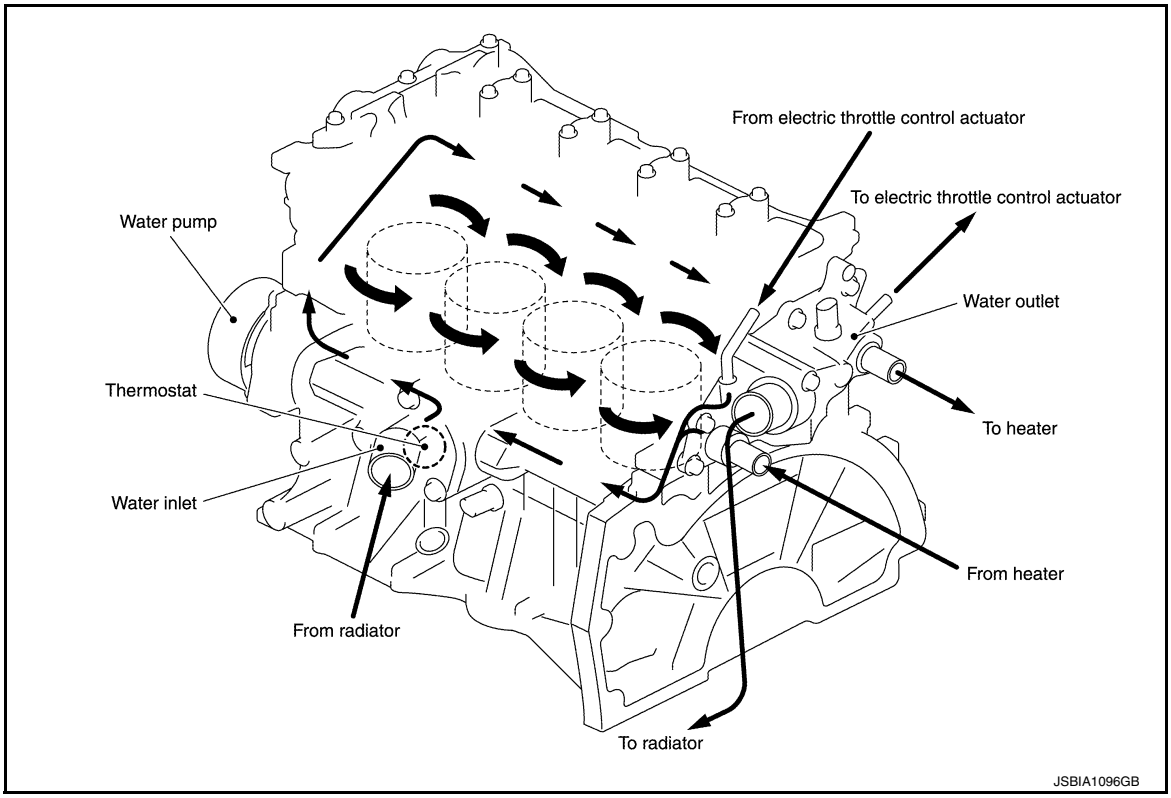

CVT models

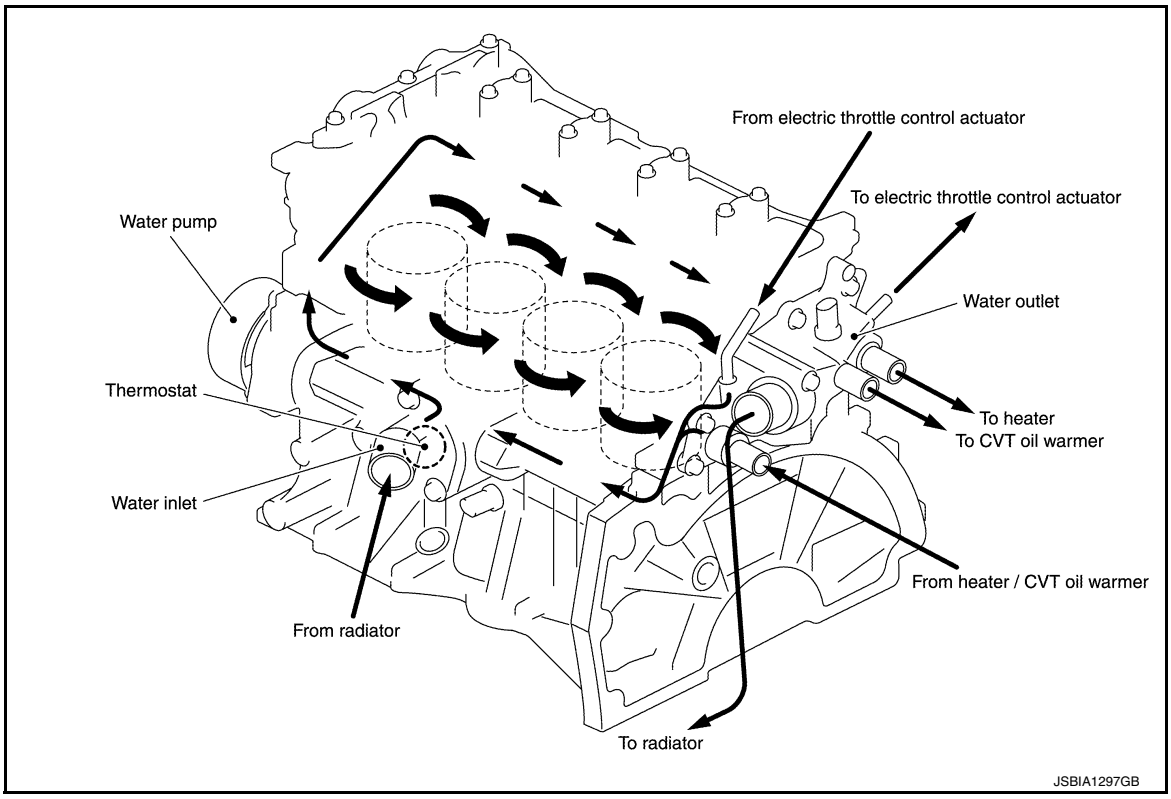

Engine Cooling System Schematic

INFOID:0000000009444789

M/T models

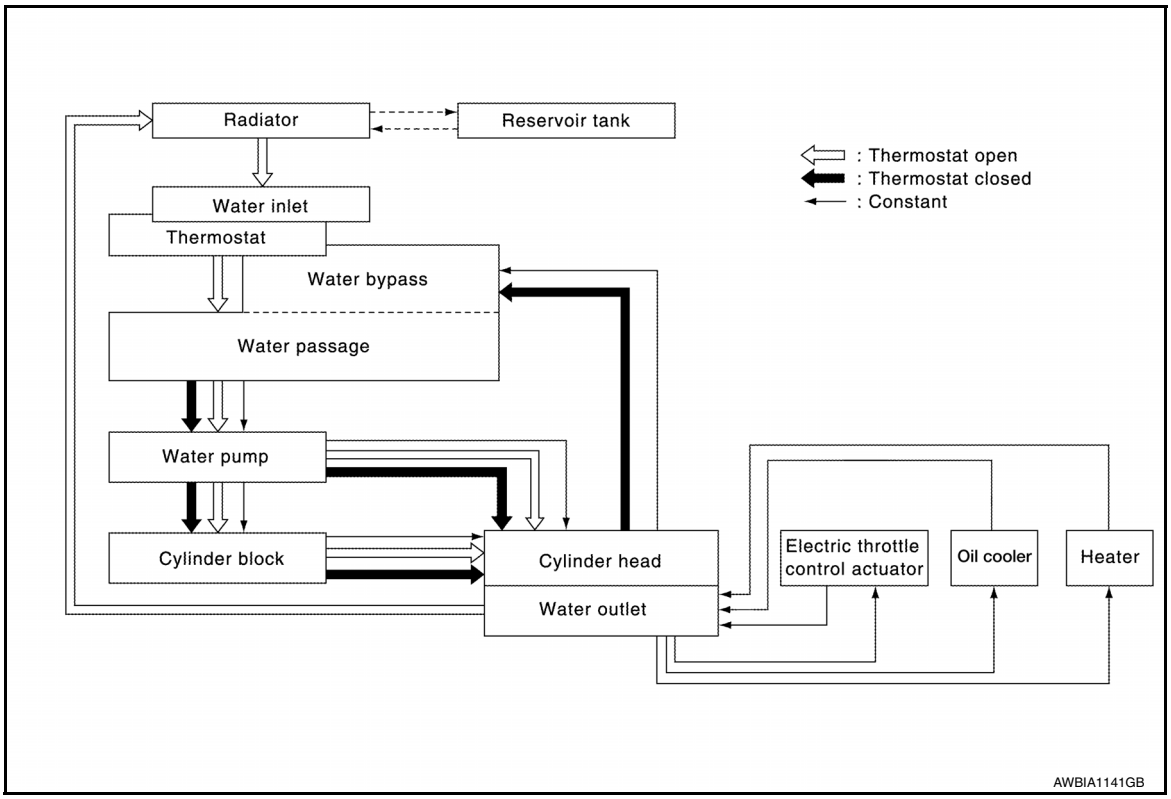

CVT models

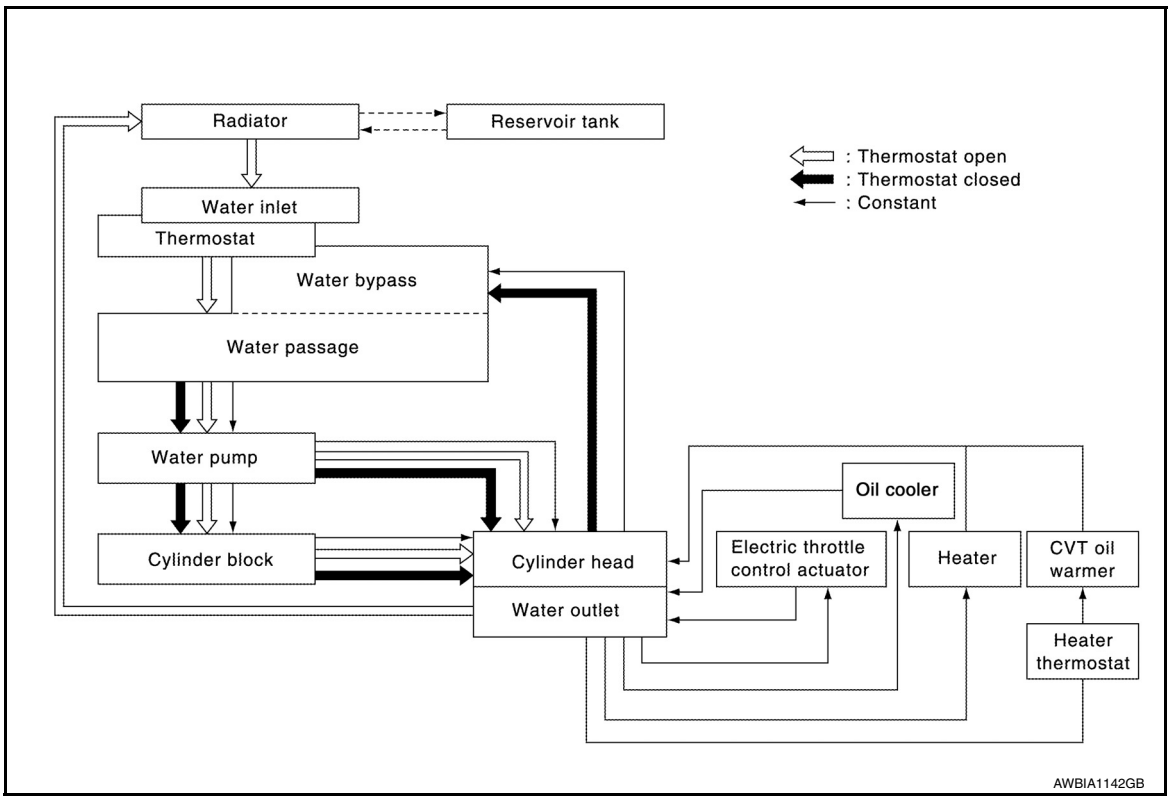

SYMPTOM DIAGNOSIS

OVERHEATING CAUSE ANALYSIS

Troubleshooting Chart

INFOID:0000000009444790

	Symptom		Check items	
Cooling system parts malfunction	Poor heat transfer	Water pump malfunction	Worn or loose drive belt	—
		Thermostat stuck closed	Thermostat	
		Damaged fins	Dust contamination or paper clogging	
			Physical damage	
		Clogged radiator cooling tube	Excess foreign material (rust, dirt, sand, etc.)	
	Reduced air flow	Cooling fan does not operate	Fan assembly	—
		High resistance to fan rotation		
		Damaged fan blades		
	Damaged radiator shroud	—	Radiator shroud	—
	Improper engine coolant mixture ratio	—	Engine coolant viscosity	—
	Poor engine coolant quality	—	Periodic maintenance	—
	Insufficient engine coolant	Engine coolant leaks	Cooling hose	Loose clamp
				Cracked hose
			Water pump	Poor sealing
			Radiator cap	Loose
				Poor sealing
			Radiator	O-ring for damage, deterioration or improper fitting
				Cracked radiator tank
				Cracked radiator core
			Reservoir tank	Cracked reservoir tank
		Overflowing reservoir tank	Exhaust gas leaking into cooling system	Cylinder head deterioration
				Cylinder head gasket deterioration

	Symptom		Check items	
Except cooling system parts malfunction	—	Overload on engine	Abusive driving	High engine rpm under no load
				Driving in low gear for extended time
				Driving at extremely high speed
			Power train system malfunction	—
			Installed improper size wheels and tires	
			Dragging brakes	
			Improper ignition timing	
	Blocked or restricted air flow	Blocked bumper	Installed front bumper fascia cover	—
		Blocked radiator grille	Mud contamination or paper clogging	
		Blocked radiator	Blocked air flow	
		Blocked condenser		
		Installed large fog lamp		

PERIODIC MAINTENANCE

ENGINE COOLANT

Inspection

INFOID:0000000009444791

CHECKING COOLING SYSTEM HOSES

Check hoses for the following:
- Improper attachment
- Leaks
- Cracks
- Damage
- Loose connections
- Chafing
- Deterioration

CHECKING RESERVOIR LEVEL

- Check that the reservoir tank engine coolant level is within the MAX (A) to MIN (B) range when the engine is cool.
- Adjust the engine coolant level if necessary.

  CAUTION:
  Refill the engine cooling system with the specified coolant or equivalent. Refer to MA-11, "Fluids and Lubricants".

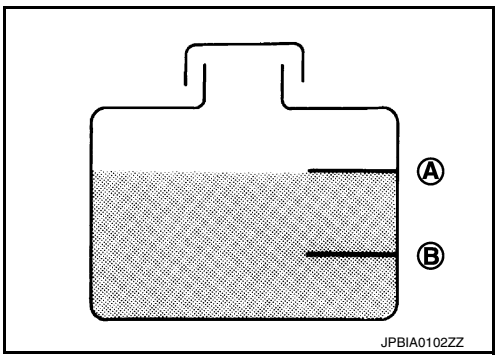

CHECKING COOLING SYSTEM FOR LEAKS

WARNING:
Do not remove the radiator cap when the engine is hot. Serious burns could occur from high-pressure engine coolant escaping from the radiator. Wrap a thick cloth around the cap. Slowly push down and turn it a quarter turn to allow built-up pressure to escape. Carefully remove the cap by pushing it down and turning it all the way.

CAUTION:
- **Perform this step when the engine is cold.**
- **Do not spill engine coolant on drive belt.**

To check for leaks, apply pressure to the cooling system using suitable tool (A) and Tool (B).

Tool number (B)	**: EG17650301 (J-33984-A)**
Testing pressure	**: Refer to CO-12, "RADIATOR : Inspection".**

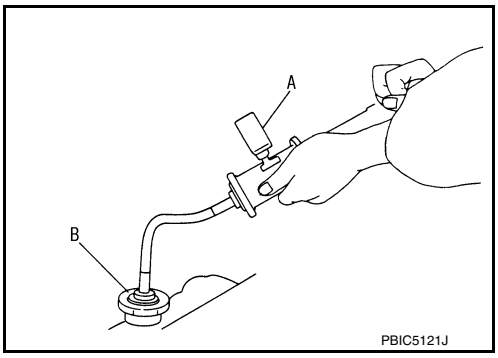

Draining Engine Coolant

INFOID:0000000009444792

WARNING:
Do not remove the radiator cap when the engine is hot. Serious burns could occur from high-pressure engine coolant escaping from the radiator. Wrap a thick cloth around the cap. Slowly push down and turn it a quarter turn to allow built-up pressure to escape. Carefully remove the cap by pushing it down and turning it all the way.

1. Remove front under cover. Refer to EXT-37, "FRONT UNDER COVER : Removal and Installation".

2. Connect a suitable hose to the radiator drain plug.
   - Use a suitable hose with the dimensions as shown.

Diameter (A) : 0.8 mm (0.31 in)
Length (B) : 300 mm (11.81 in)

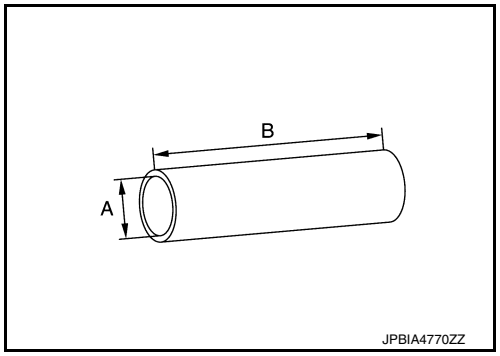

3. Open radiator drain plug (A) at the bottom of radiator, and then remove radiator cap.
   (B): Suitable hose
   ⇦: Front
   CAUTION:
   - **Perform this step when engine is cold.**
   - **Do not spill engine coolant on the drive belt.**

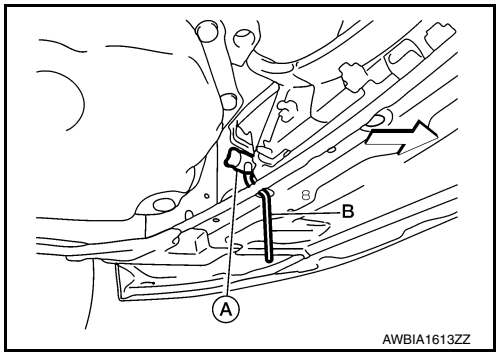

4. It is necessary to drain the cylinder block when draining all of engine coolant in the system. To drain the cylinder block, open the water drain plugs on cylinder block. Refer to EM-92, "Exploded View".
5. Remove reservoir tank if necessary, and drain engine coolant and clean reservoir tank before installing. Refer to CO-14, "Exploded View".
6. Check drained engine coolant for contaminants such as rust, corrosion or discoloration. If contaminated, flush the engine cooling system. Refer to CO-11, "Flushing Cooling System".

Refilling

INFOID:0000000009509399

1. Install the radiator drain plug. Install the reservoir tank and cylinder block drain plug, if removed for a total system drain or for engine removal or repair.
   - **The radiator must be completely empty of engine coolant and water.**
   - **Apply sealant to the threads of the cylinder block drain plug. Use Genuine High Performance Thread Sealant or equivalent. Refer to MA-11, "Fluids and Lubricants".**

Radiator drain plug : Refer to CO-14, "Exploded View".

2. If disconnected, reattach the upper radiator hose at the engine side.
3. Set the vehicle heater controls to the full HOT and heater ON position. Turn the vehicle ignition ON with the engine OFF as necessary to activate the heater mode.

4. Install the Tool by installing the radiator cap adapter onto the radiator neck opening. Then attach the gauge body assembly with the refill tube and the venturi assembly to the radiator cap adapter.

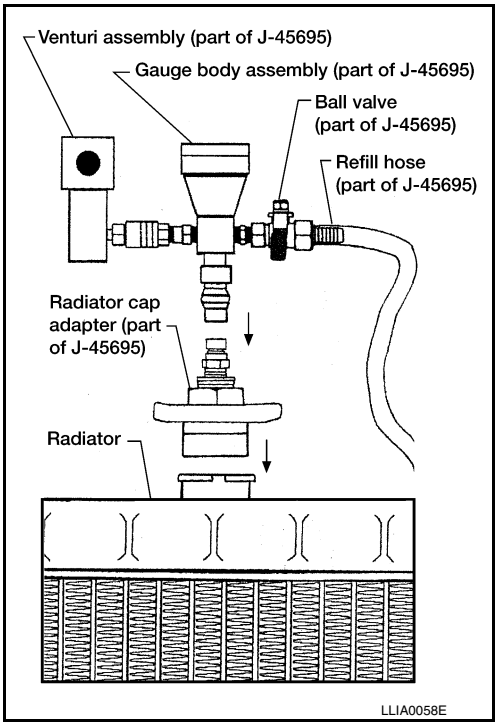

Tool number : KV991J0070 (J-45695)

5. Insert the refill hose into the engine coolant mixture container that is placed at floor level. Make sure the ball valve is in the closed position.
   - **Use recommended engine coolant or equivalent. Refer to** MA-11, "Fluids and Lubricants".

Engine coolant capacity (with reservoir tank) : Refer to MA-11, "Fluids and Lubricants".

CAUTION:
Do not use any cooling system additives such as radiator sealer. Additives may clog the cooling system and cause damage to the engine, transmission and/or cooling system.

6. Install an air hose to the venturi assembly, the air pressure must be within specification.

Compressed air supply pressure : 549 - 824 kPa (5.6 - 8.4 kg/cm^2, 80 - 119 psi)

CAUTION:
The compressed air supply must be equipped with an air dryer.

7. The vacuum gauge will begin to rise and there will be an audible hissing noise. During this process open the ball valve on the refill hose slightly. Engine coolant will be visible rising in the refill hose. Once the refill hose is full of engine coolant, close the ball valve. This will purge any air trapped in the refill hose.

8. Continue to draw the vacuum until the gauge reaches 28 inches of vacuum. The gauge may not reach 28 inches in high altitude locations, use the vacuum specifications based on the altitude above sea level.

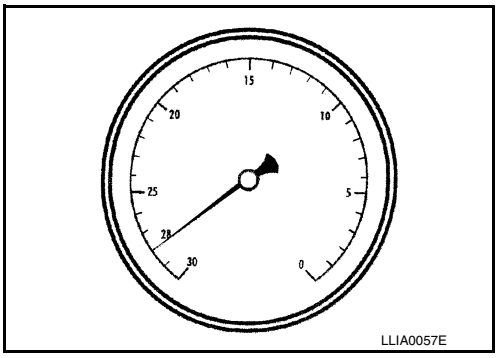

Altitude above sea level	Vacuum gauge reading
0 - 100 m (328 ft)	: 28 inches of vacuum
300 m (984 ft)	: 27 inches of vacuum
500 m (1,641 ft)	: 26 inches of vacuum
1,000 m (3,281 ft)	: 24 - 25 inches of vacuum

9. When the vacuum gauge has reached the specified amount, disconnect the air hose and wait 20 seconds to see if the system loses any vacuum. If the vacuum level drops, perform any necessary repairs to the system and repeat steps 6 - 8 to bring the vacuum to the specified amount. Recheck for any leaks.
10. Place the engine coolant container (with the refill hose inserted) at the same level as the top of the radiator. Then open the ball valve on the refill hose so the engine coolant will be drawn up to fill the cooling system. The cooling system is full when the vacuum gauge reads zero.
    CAUTION:
    Do not allow the engine coolant container to get too low when filling, to avoid air from being drawn into the cooling system.
11. Remove the Tool from the radiator neck opening.
12. Fill the cooling system reservoir tank to the specified level and install the radiator cap. Run the engine to warm up the cooling system and top up the system as necessary.
13. Install the front under cover. Refer to EXT-37, "FRONT UNDER COVER : Removal and Installation".

Flushing Cooling System

INFOID:0000000009444794

1. Install radiator drain plug and reservoir tank, if removed.

   Radiator drain plug : Refer to CO-14, "Exploded View".

   CAUTION:
   Be sure to clean drain plug and install with new O-ring.
2. If water drain plugs on cylinder block were removed, close and tighten them. Refer to EM-92, "Exploded View".
3. Remove air duct from between air cleaner case and electric throttle control actuator. Refer to EM-26, "Removal and Installation".
4. Disconnect heater hose (1) at location (⬅) as shown.
   - Position heater hose as high as possible.

   ⇦: Front

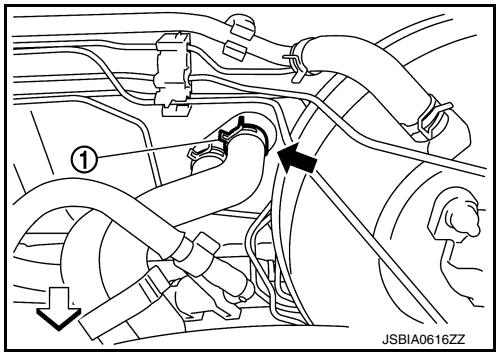

5. Fill radiator until engine coolant flows out of the disconnected heater hose and then reconnect the heater hose.
6. Finish filling the engine and reservoir tank with water and reinstall the radiator cap.
7. Install air duct in between air cleaner case and electric throttle control actuator. Refer to EM-26, "Removal and Installation".
8. Run the engine and warm it up to normal operating temperature.
9. Rev the engine two or three times under no-load.
10. Stop the engine and wait until it cools down.
11. Drain water from the system. Refer to CO-8, "Draining Engine Coolant".
12. Repeat steps 1 through 11 until clear water begins to drain from radiator.

RADIATOR

RADIATOR CAP

RADIATOR CAP : Inspection

INFOID:0000000009444795

- Check valve seat (A) of radiator cap.

(B) : Metal plunger

- Replace the cap if the metal plunger cannot be seen around the edge of the black rubber gasket.
- Replace the cap if deposits of waxy residue or other foreign material are on the black rubber gasket or the metal retainer.
  NOTE:
  Thoroughly wipe out the radiator filler neck to remove any waxy residue or foreign material.

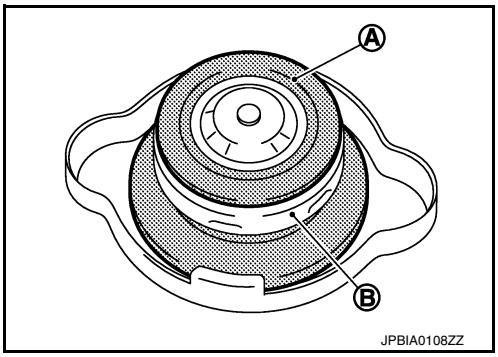

- Pull negative-pressure valve to open it, and check that it closes completely when released.
- Check that there is no dirt or damage on the valve seat of radiator cap negative-pressure valve.
- Check that there are no abnormalities in the opening and closing conditions of negative-pressure valve.

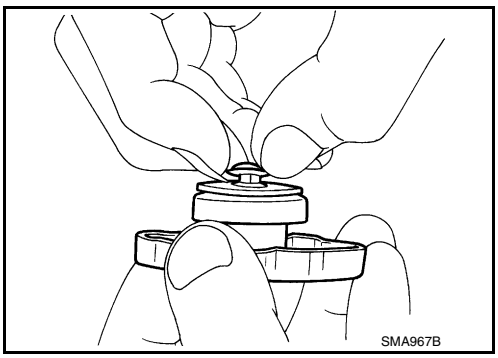

- Check radiator cap relief pressure using suitable tool (A) and Tool (B).

Tool number : EG17650301 (J-33984-A)

Standard and Limit : Refer to CO-26, "Standard and Limit".

- When connecting the radiator cap to Tool (B), apply water or engine coolant to the cap seal surface.
- Replace the radiator cap if there is an abnormality in the negative-pressure valve, or if the open-valve pressure is outside of the standard values.

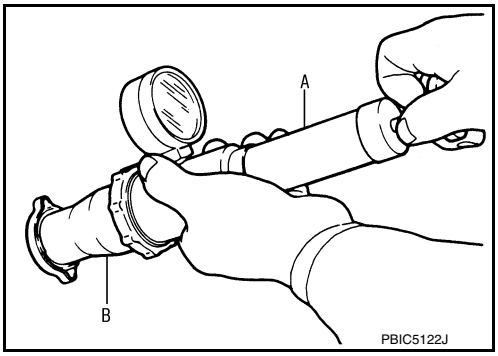

RADIATOR

RADIATOR : Inspection

INFOID:0000000009509401

Check radiator for mud or clogging. If necessary, clean radiator as follows.

CAUTION:

- **Be careful not to bend or damage radiator fins.**
- **When radiator is cleaned without removal, remove all surrounding parts in order to access the radiator core. Then tape harness and harness connectors to prevent water from entering.**

1. Spray water to the back side of the radiator core using a side to side motion from the top down.
2. Stop spraying when debris no longer flows from radiator.
3. Blow air into the back side of radiator core using side to side motion from the top down.
   - Use compressed air lower than 490 kPa (5 kg/cm^2, 71 psi) and keep distance more than 30 cm (11.81 in).
4. Continue to blow air until no water sprays out.

5. Check for engine coolant leaks. Repair if necessary.

REMOVAL AND INSTALLATION

RADIATOR

Exploded View

INFOID:0000000009444797

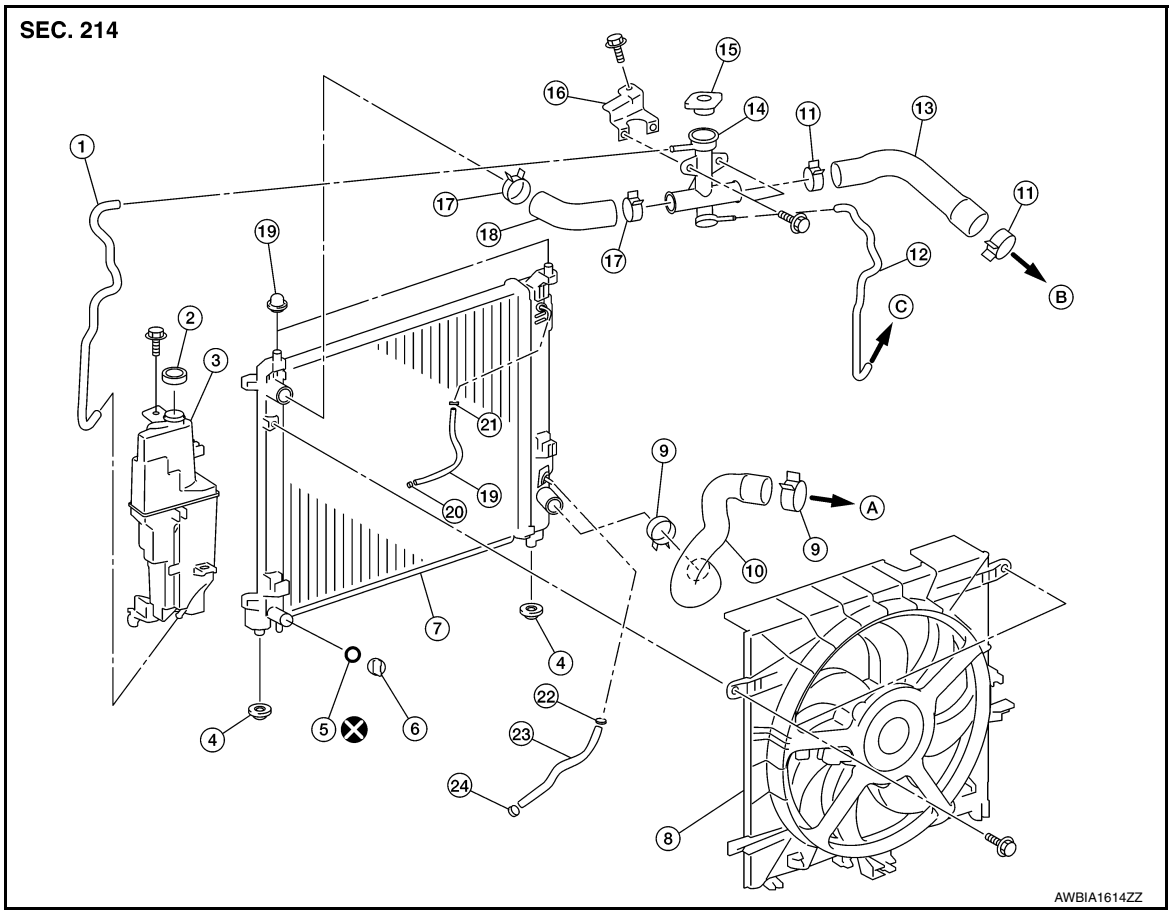

1. Reservoir tank hose	2. Reservoir tank cap	3. Reservoir tank
4. Mounting rubber (lower)	5. O-ring	6. Drain plug
7. Radiator	8. Cooling fan assembly	9. Clamp
10. Radiator hose (lower)	11. Clamp	12. Oil cooler hose
13. Radiator hose to water outlet (upper)	14. Radiator cap adapter	15. Radiator cap
16. Radiator cap adapter bracket	17. Clamp	18. Radiator hose (upper) to radiator
19. Mounting rubber (upper)	20. CVT cooler hose	21. Clamp
21. Clamp	22. Clamp	23. CVT cooler hose
24. Clamp	A. To water inlet	B. To water outlet
C. To oil cooler		

Removal and Installation

INFOID:0000000009444798

REMOVAL

WARNING:

Do not remove the radiator cap when the engine is hot. Serious burns could occur from high-pressure engine coolant escaping from the radiator. Wrap a thick cloth around the radiator cap. Slowly turn it a quarter of a turn to release built-up pressure. Carefully remove radiator cap by turning it all the way.

NOTE:

When removing components such as hoses, tubes/lines, etc., cap or plug openings to prevent fluid from spilling.

1. Drain engine coolant. Refer to CO-8, "Draining Engine Coolant".
   CAUTION:
   - **Perform this step when the engine is cold.**
   - **Do not spill engine coolant on drive belt.**
2. Remove air duct (inlet). Refer to EM-26, "Removal and Installation".
3. Disconnect battery negative terminal. Refer to PG-67, "Removal and Installation (Battery)".
4. Remove radiator hose (lower).
5. Remove radiator hose (upper) from water outlet.
6. Remove the front under cover. Refer to EXT-37, "FRONT UNDER COVER : Removal and Installation".
7. Remove the front grille. Refer toEXT-29, "Removal and Installation".
8. Disconnect reservoir tank hose, and remove reservoir tank.
9. Disconnect harness connector from fan motor, and move harness aside.
10. Remove radiator core support (upper). Refer to DLK-139, "RADIATOR CORE SUPPORT UPPER : Removal and Installation".
11. Remove the condenser bolts and place aside. Refer to HA-29, "CONDENSER : Removal and Installation".
12. Remove radiator hose (upper) from radiator.
13. Remove cooling fan assembly. Refer to CO-17, "Removal and Installation".
    CAUTION:
    Be careful not to damage or scratch the radiator.
14. Disconnect CVT cooler lines.
15. Remove the radiator from bottom of the vehicle.
    CAUTION:
    When removing, do not damage or scratch radiator core or A/C condenser.

INSTALLATION

Installation is in the reverse order of removal.

CAUTION:

Do not reuse O-ring.

- Insert the radiator hose (1) all the way to the stopper (2) or by 33 mm (1.30 in) (hose without a stopper) as shown.

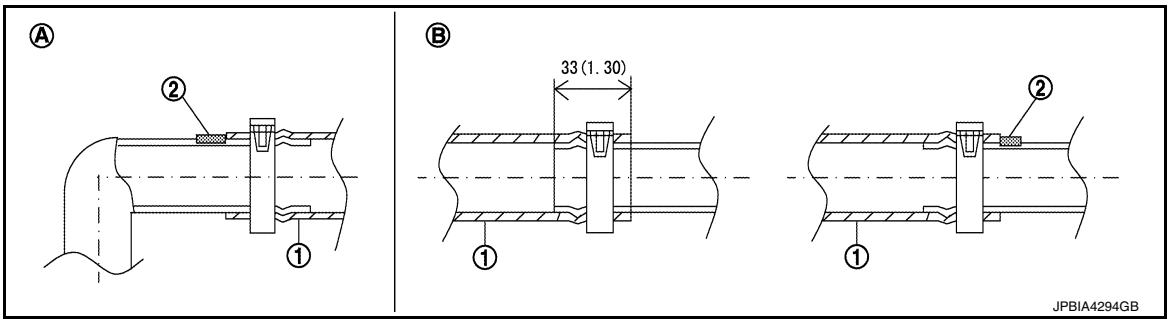

1.	Radiator hose	2.	Stopper
A.	Radiator side	B.	Engine side

- The correct orientation of the hose clamps are as shown.

Radiator hose	Hose end	Paint mark	Position of hose clamp*
Radiator hose (upper)	Radiator side	Upper	A
	Engine side	Upper	B
Radiator hose (lower)	Radiator side	Lower	C
	Engine side	Upper	D

*: Refer to the illustrations for the specific position for each hose clamp tab.

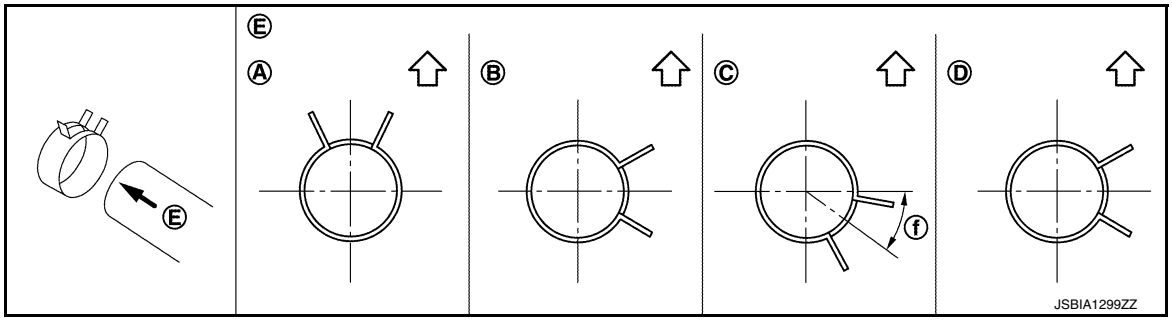

A. View A
B. View B
C. View C
D View D
E. View E
f. 45°
⇦ : Vehicle upper

- The angle (b) created by the hose clamp pawl and the specified line (A) must be within ±30° as shown.

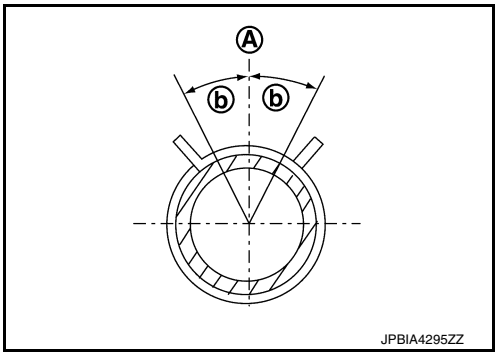

- To install hose clamps (1), check that the dimension (A) from the end of the hose clamp on the radiator hose to the hose clamp is within the reference value.

Dimension (A) : 3 – 7 mm (0.12 – 0.28 in)

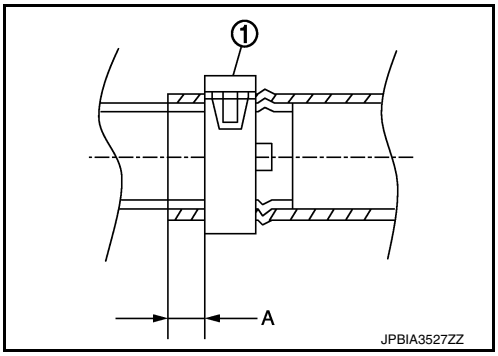

CAUTION:
- **When installing do not damage or scratch radiator core or A/C condenser.**
- **Replace water hose clamp if it is removed.**
- **Use only Genuine NISSAN bolts for the cooling fan assembly and strictly follow the tightening torque. Over tightening may damage the radiator.**

INSPECTION AFTER INSTALLATION

- Check for engine coolant leaks. Refer to CO-8, "Inspection".
- Start and warm up the engine. Visually inspect for engine coolant leaks. Repair as necessary.

COOLING FAN

Exploded View

INFOID:0000000009444799

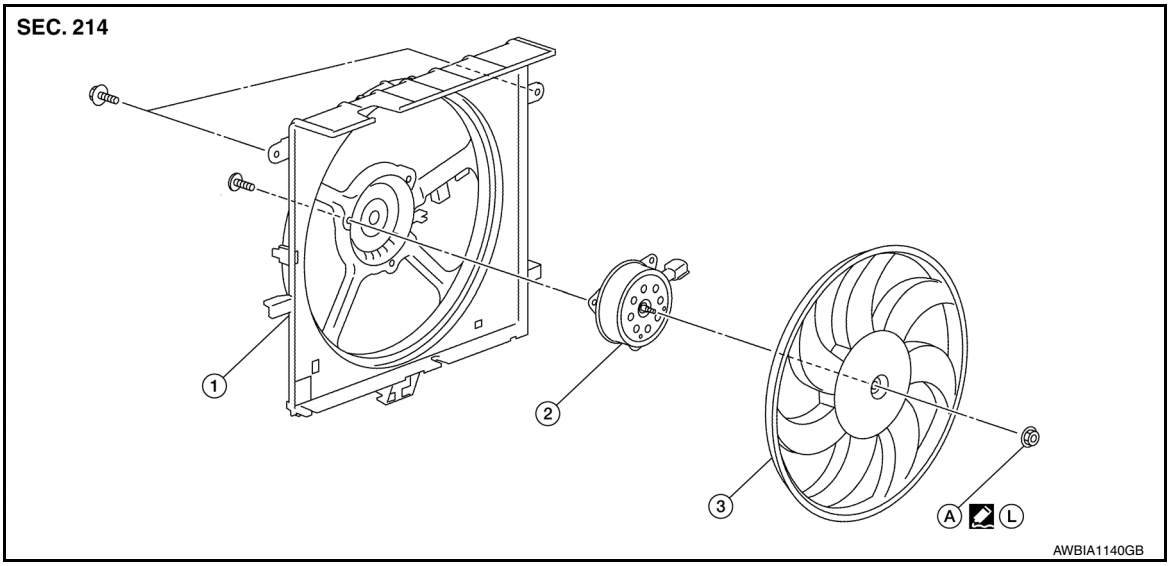

1.	Fan shroud	2.	Fan motor	3.	Cooling fan
A.	Cooling fan nut	L.	Genuine NISSAN high strength locking sealant		

Removal and Installation

INFOID:0000000009444800

REMOVAL

WARNING:
Do not remove the radiator cap when the engine is hot. Serious burns could occur from high-pressure engine coolant escaping from the radiator. Wrap a thick cloth around the radiator cap. Slowly turn it a quarter of a turn to release built-up pressure. Carefully remove radiator cap by turning it all the way.
NOTE:
When removing components such as hoses, tubes/lines, etc., cap or plug openings to prevent fluid from spilling.

1. Drain engine coolant. Refer to CO-8, "Draining Engine Coolant".
   CAUTION:
   - **Perform this step when the engine is cold.**
   - **Do not spill engine coolant on drive belt.**
2. Disconnect battery negative terminal. Refer to PG-67, "Removal and Installation (Battery)".
3. Remove the front grille. Refer toEXT-29, "Removal and Installation".
4. Remove reservoir tank. Refer to CO-14, "Exploded View".
5. Disconnect harness connector from fan motor, and move harness aside.
6. Remove radiator core support (upper). Refer to DLK-139, "RADIATOR CORE SUPPORT UPPER : Removal and Installation".
7. Remove cooling fan assembly. Refer to CO-17, "Removal and Installation".
   CAUTION:
   Be careful not to damage or scratch the radiator.

INSTALLATION

Installation is in the reverse order of removal.
CAUTION:
Only use Genuine NISSAN parts for the fan shroud bolt.
NOTE:
Cooling fan assembly is controlled by ECM. For details, refer to EC-38, "COOLING FAN CONTROL : System Description".

Disassembly and Assembly

INFOID:0000000009444801

DISASSEMBLY

1. Remove cooling fan nut, and then remove the cooling fan.
2. Remove fan motor.

INSPECTION AFTER DISASSEMBLY

Cooling fan and shroud
Inspect cooling fan and shroud for nicks, cracks, breaks and warping. Replace if necessary.

ASSEMBLY

Assembly is in the reverse order of disassembly.
CAUTION:
Apply Genuine NISSAN high strength thread locking sealant on fan motor shaft.

WATER PUMP

Exploded View

INFOID:0000000009444802

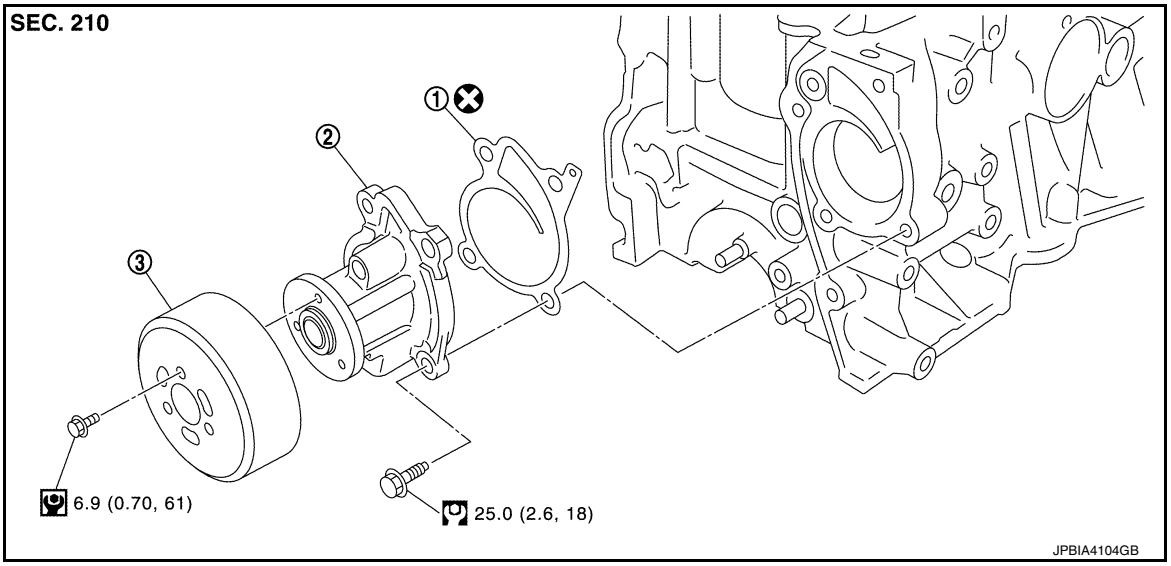

1. Gasket
2. Water pump
3. Water pump pulley

Removal and Installation

INFOID:0000000009444803

WARNING:
Do not remove the radiator cap when the engine is hot. Serious burns could occur from high-pressure engine coolant escaping from the radiator. Wrap a thick cloth around the radiator cap. Slowly turn it a quarter of a turn to release built-up pressure. Carefully remove radiator cap by turning it all the way.

REMOVAL

1. Drain engine coolant from radiator. Refer to CO-8, "Draining Engine Coolant".
   CAUTION:
   - **Perform this step when the engine is cold.**
   - **Do not spill engine coolant on drive belt.**
2. Remove front wheel and tire (RH) using power tool. Refer to WT-45, "Removal and Installation".
3. Remove front fender protector (RH). Refer to EXT-36, "Removal and Installation".
4. Loosen water pump pulley bolts before loosening belt tension of drive belt.
5. Remove drive belt. Refer to EM-16, "Removal and Installation".
6. Remove water pump pulley.
7. Remove water pump.
   - Loosen water pump bolts in reverse order as shown.
   - Engine coolant will leak from cylinder block, so have a receptacle ready below.

   CAUTION:
   - **Do not allow water pump vane to contact any other parts.**
   - **Water pump cannot be disassembled and must be replaced as an assembly.**

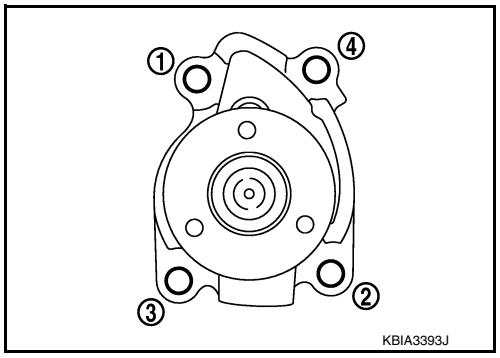

INSPECTION AFTER REMOVAL

- Visually check for significant dirt or rust on the water pump body and vane (A) and replace as necessary.
- Check that the vane shaft turns smoothly by hand and is not excessively loose.
- Replace the water pump assembly if the water pump does not perform properly.

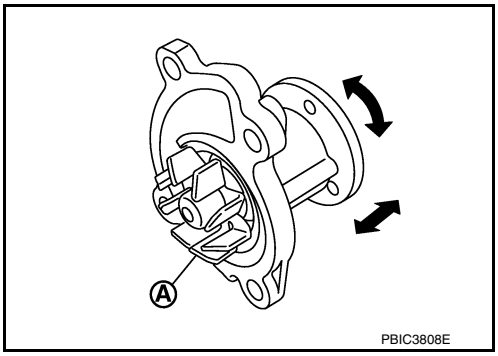

INSTALLATION

Installation is in the reverse order of removal.

- Tighten water pump bolts in order as shown.

CAUTION:

- **Do not allow the water pump vane to contact any other parts.**
- **Water pump cannot be disassembled and must be replaced as an assembly.**
- **Do not reuse gasket.**
- **Sealing surface must be clean and free of dents or flaws.**

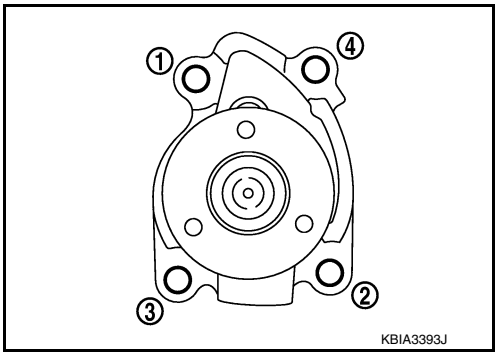

INSPECTION AFTER INSTALLATION

- Before starting engine, check oil/fluid levels, including engine coolant and engine oil. If less than required quantity, fill to the specified level. Refer to MA-11, "Fluids and Lubricants".
- Use procedure below to check for fuel leaks.
- Turn ignition switch ON (with engine stopped). With fuel pressure applied to fuel piping, check for fuel leaks at connection points.
- Start engine. With engine speed increased, check again for fuel leaks at connection points.
- Run engine to check for unusual noise and vibration.

  NOTE:

  If hydraulic pressure inside timing chain tensioner drops after removal and installation, slack in the guide may generate a pounding noise during and just after engine start. However, this is normal. Noise will stop after hydraulic pressure rises.
- Warm up engine thoroughly to make sure there is no leaks of fuel, exhaust gas, or any oils/fluids, including engine oil and engine coolant.
- Bleed air from passages in lines and hoses, such as in cooling system.
- After cooling down engine, again check oil/fluid levels, including engine oil and engine coolant. Refill to specified level, if necessary.
- Summary of the inspection items:

Item		Before starting engine	Engine running	After engine stopped
Engine coolant		Level	Leaks	Level
Engine oil		Level	Leaks	Level
Transmission/ transaxle fluid	CVT Models	Leaks	Level/Leaks	Leaks
	M/T Models	Level/Leaks	Leaks	Level/Leaks
Other oils and fluids*		Level	Leaks	Level
Fuel		Leaks	Leaks	Leaks
Exhaust gas		—	Leaks	—

*Power steering fluid, brake fluid, etc.

THERMOSTAT

Exploded View

INFOID:0000000009444804

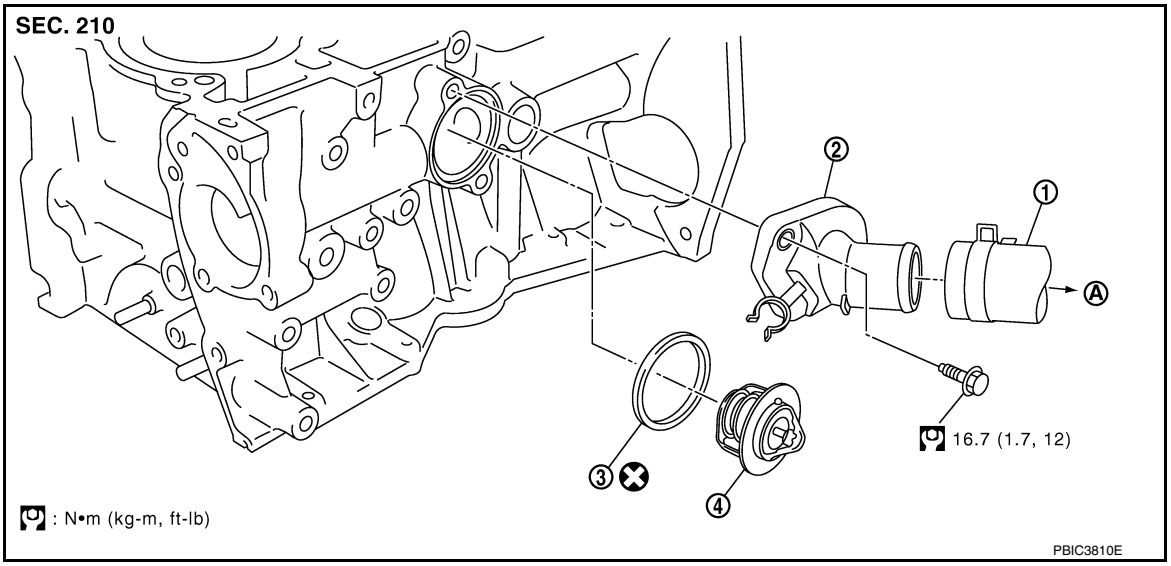

1. Radiator hose (lower)
2. Water inlet
3. Rubber ring
4. Thermostat
A. To radiator

Removal and Installation

INFOID:0000000009444805

WARNING:
Do not remove the radiator cap when the engine is hot. Serious burns could occur from high-pressure engine coolant escaping from the radiator. Wrap a thick cloth around the radiator cap. Slowly turn it a quarter of a turn to release built-up pressure. Carefully remove radiator cap by turning it all the way.

REMOVAL

1. Drain engine coolant from radiator. Refer to CO-8, "Draining Engine Coolant".
   CAUTION:
   - **Perform this step when engine is cold.**
   - **Do not spill engine coolant on drive belt.**
2. Remove air duct. Refer to EM-26, "Removal and Installation".
3. Disconnect radiator hose (lower) from water inlet. Refer to CO-14, "Exploded View".
4. Remove water inlet, thermostat, and rubber ring.
   NOTE:
   Engine coolant will leak from cylinder block, so have a receptacle ready below.

INSPECTION AFTER REMOVAL

Thermostat

- Place a thread (A) so that it is caught in the valves of thermostat (1). Immerse fully in a container (B) filled with water. Heat while stirring.
- The valve opening temperature is the temperature at which the valve opens and falls from the thread.
- Continue heating. Check the full open valve lift amount.
- After checking the maximum valve lift amount, lower the water temperature and check the valve closing temperature.

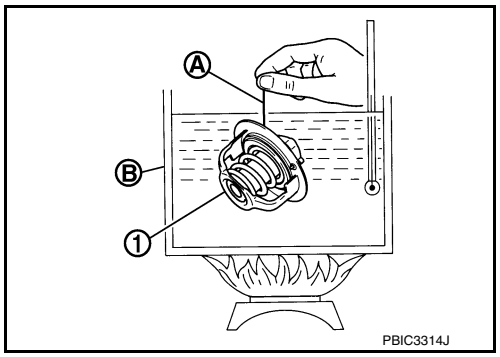

Standard: Refer to CO-26, "Standard and Limit".

- If out of the standard specification range, replace the thermostat.

INSTALLATION

Installation is in the reverse order of removal.

Thermostat

- Install thermostat making sure rubber ring (1) groove fits securely to thermostat flange (A).
  CAUTION:
  Do not reuse rubber ring.

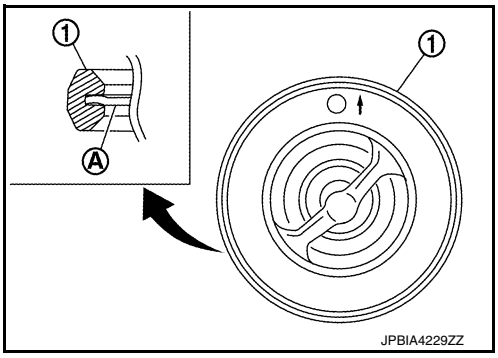

- Install thermostat (2) into the cylinder block (1) with jiggle valve (A) facing upward.

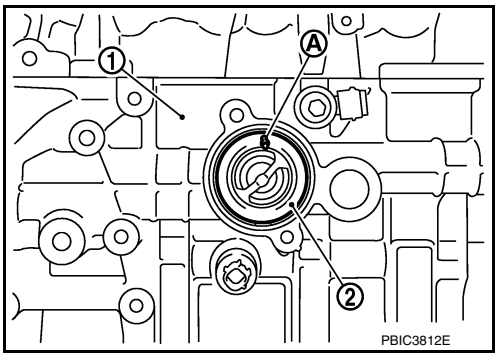

Water Inlet

After installation, attach the water inlet clip (A) on the oil level gauge guide (1) positioned at location (B) as shown.

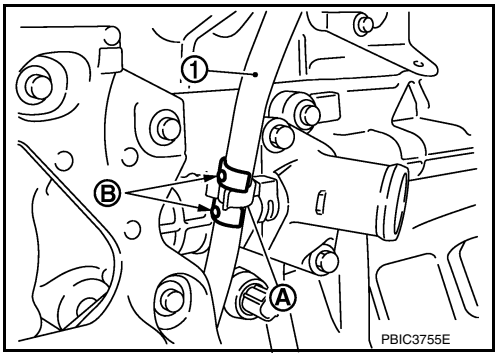

INSPECTION AFTER INSTALLATION

- Before starting engine, check oil/fluid levels, including engine coolant and engine oil. If less than required quantity, fill to the specified level. Refer to MA-11, "Fluids and Lubricants".
- Use procedure below to check for fuel leaks.
- Turn ignition switch ON (with engine stopped). With fuel pressure applied to fuel piping, check for fuel leaks at connection points.
- Start engine. With engine speed increased, check again for fuel leaks at connection points.
- Run engine to check for unusual noise and vibration.
  NOTE:
  If hydraulic pressure inside timing chain tensioner drops after removal and installation, slack in the guide may generate a pounding noise during and just after engine start. However, this is normal. Noise will stop after hydraulic pressure rises.
- Warm up engine thoroughly to make sure there is no leaks of fuel, exhaust gas, or any oils/fluids, including engine oil and engine coolant.
- Bleed air from passages in lines and hoses, such as in cooling system.
- After cooling down engine, again check oil/fluid levels, including engine oil and engine coolant. Refill to specified level, if necessary.
- Summary of the inspection items:

Item		Before starting engine	Engine running	After engine stopped
Engine coolant		Level	Leaks	Level
Engine oil		Level	Leaks	Level
Transmission/ transaxle fluid	CVT Models	Leaks	Level/Leaks	Leaks
	M/T Models	Level/Leaks	Leaks	Level/Leaks
Other oils and fluids*		Level	Leaks	Level
Fuel		Leaks	Leaks	Leaks
Exhaust gas		—	Leaks	—

*Power steering fluid, brake fluid, etc.

WATER OUTLET

Exploded View

INFOID:0000000009444806

M/T model

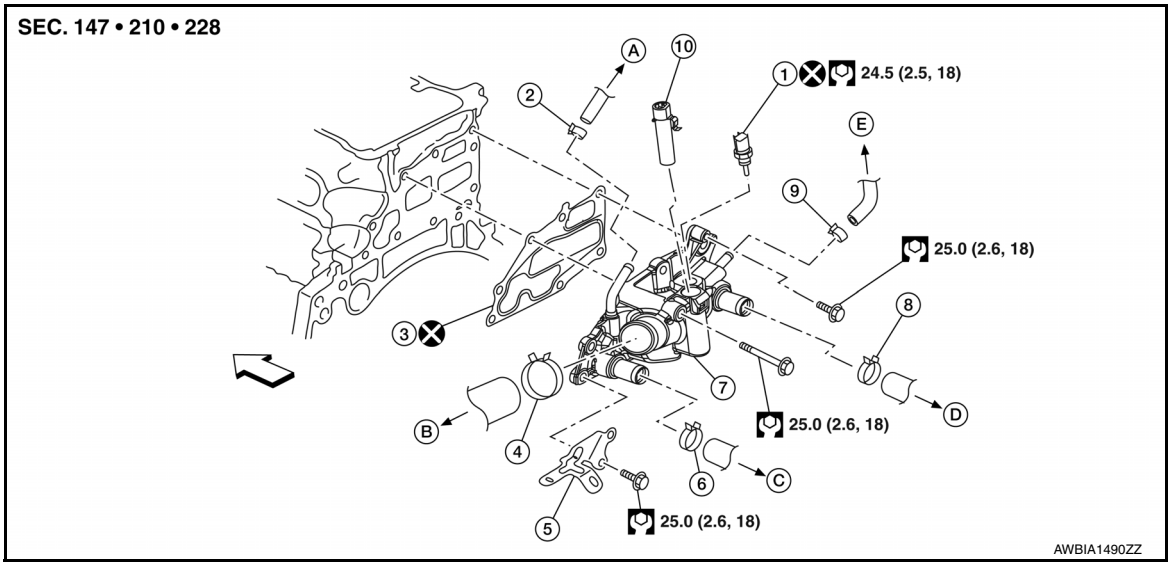

1.	Engine coolant temperature sensor	2.	Clamp	3.	Gasket
4.	Clamp	5.	Bracket	6.	Clamp
7.	Water outlet	8.	Clamp	9.	Clamp
10.	Cylinder block heater (Canada)	A.	From electric throttle control actuator	B.	To radiator
C.	From heater core	D.	To heater core	E.	To electric throttle control actuator
⇦	Front				

CVT model

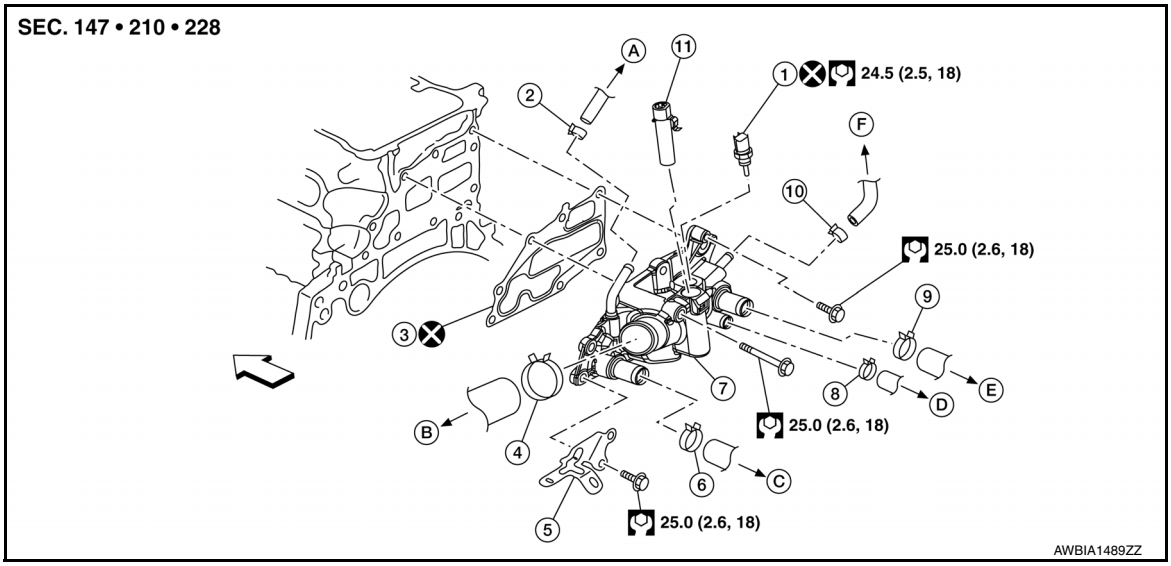

1.	Engine coolant temperature sensor	2.	Clamp	3.	Gasket
4.	Clamp	5.	Bracket	6.	Clamp
7.	Water outlet	8.	Clamp	9.	Clamp
10.	Clamp	11.	Cylinder block heater (Canada)	A.	From electric throttle control actuator
B.	To radiator	C.	To heater core / CVT oil warmer	D.	To CVT oil warmer
E.	To heater core	F.	To electric throttle control actuator	⇦	Front

Removal and Installation

INFOID:0000000009444807

WARNING:
Do not remove the radiator cap when the engine is hot. Serious burns could occur from high-pressure engine coolant escaping from the radiator. Wrap a thick cloth around the radiator cap. Slowly turn it a quarter of a turn to release built-up pressure. Carefully remove radiator cap by turning it all the way.
NOTE:
When removing components such as hoses, tubes/lines, etc., cap or plug openings to prevent fluid from spilling.

REMOVAL

1. Drain engine coolant. Refer to CO-8, "Draining Engine Coolant".
   CAUTION:
   - **Perform this step when engine is cold.**
   - **Do not spill engine coolant on drive belt.**
2. Remove air ducts and air cleaner assembly. Refer to EM-26, "Removal and Installation".
3. Disconnect radiator hose (upper). Refer to CO-14, "Exploded View".
4. Disconnect harness connector from engine coolant temperature sensor.
5. Disconnect harness connector from cylinder block heater (Canada only).
6. Disconnect water hoses and heater hoses from water outlet.
7. Remove water outlet.
8. Remove engine coolant temperature sensor from water outlet, if necessary.
9. Remove cylinder block heater from water outlet, if necessary (Canada only).

INSTALLATION

Installation is in the reverse order of removal.

INSPECTION AFTER INSTALLATION

- Before starting engine, check oil/fluid levels, including engine coolant and engine oil. If less than required quantity, fill to the specified level. Refer to MA-11, "Fluids and Lubricants".
- Use procedure below to check for fuel leaks.
- Turn ignition switch ON (with engine stopped). With fuel pressure applied to fuel piping, check for fuel leaks at connection points.
- Start engine. With engine speed increased, check again for fuel leaks at connection points.
- Run engine to check for unusual noise and vibration.
  NOTE:
  If hydraulic pressure inside timing chain tensioner drops after removal and installation, slack in the guide may generate a pounding noise during and just after engine start. However, this is normal. Noise will stop after hydraulic pressure rises.
- Warm up engine thoroughly to make sure there is no leaks of fuel, exhaust gas, or any oils/fluids, including engine oil and engine coolant.
- Bleed air from passages in lines and hoses, such as in cooling system.
- After cooling down engine, again check oil/fluid levels, including engine oil and engine coolant. Refill to specified level, if necessary.
- Summary of the inspection items:

Item		Before starting engine	Engine running	After engine stopped
Engine coolant		Level	Leaks	Level
Engine oil		Level	Leaks	Level
Transmission/ transaxle fluid	CVT Models	Leaks	Level/Leaks	Leaks
	M/T Models	Level/Leaks	Leaks	Level/Leaks
Other oils and fluids*		Level	Leaks	Level
Fuel		Leaks	Leaks	Leaks
Exhaust gas		—	Leaks	—

*Power steering fluid, brake fluid, etc.

SERVICE DATA AND SPECIFICATIONS (SDS)

SERVICE DATA AND SPECIFICATIONS (SDS)

Standard and Limit

INFOID:0000000009444808

Engine coolant capacity (approximate)

Unit: ℓ (US qt, Imp qt)

Engine coolant capacity (With reservoir tank at “MAX” level)*	CVT models	7.3 (7-3/4, 6-3/8)
	M/T models	6.7 (7-1/8, 5-7/8)
Reservoir tank engine coolant capacity (At “MAX” level)		0.7 (3/4, 5/8)

*: Includes reservoir amount.

Radiator

Unit: kPa (kg/cm^2, psi)

Cap relief pressure	Standard	88 (0.90, 12.8)
Radiator leak test pressure		156 (1.59, 22.6)

Thermostat

Standard

Valve opening temperature	80.5 - 83.5°C (177 - 182°F)
Maximum valve lift	8.0 mm/95°C (0.315 in/203°F)
Valve closing temperature	77°C (171°F)